TOWN OF EASTHAM

2500 State Highway, Eastham, MA 02642-2544
All departments 508-240-5900 • *Fax* 508-240-1291
www.eastham-ma.gov

DATE: **January 15, 2013**

TO: **Vendors:** **Concrete Flatwork at Fuel Dock and Transfer Station**
Advertised: **Central Register on 1-9-13**
Cape Codder on 1-11-13

FROM: **Nan Balmer, Assistant Town Administrator**

RE: **Addendum #1 to Invitation for Bid**

Attached please find: Addendum #1, "Plans" for the Town of Eastham Invitation for Bid for Concrete Flatwork.

PLANS: CONCRETE FLATWORK

P. 1

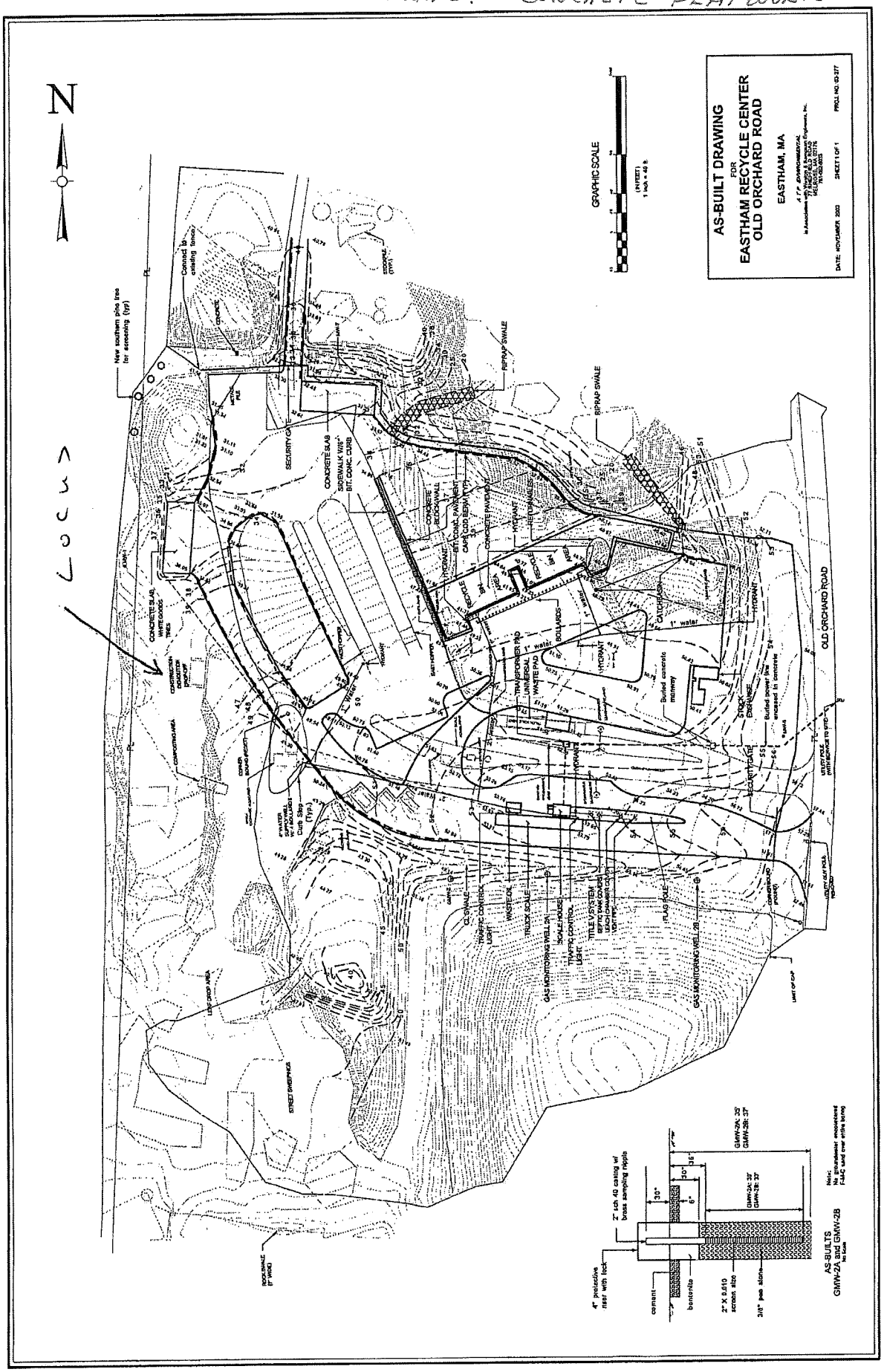

PLANS: CONCRETE FLATWORK P.2

DEMOLITION MATERIAL PAD

10" Thick PCC 4,000 3/4 611 lb MAX FLY ASH 12%

Double MAT #5 RB 8" ON CENTER

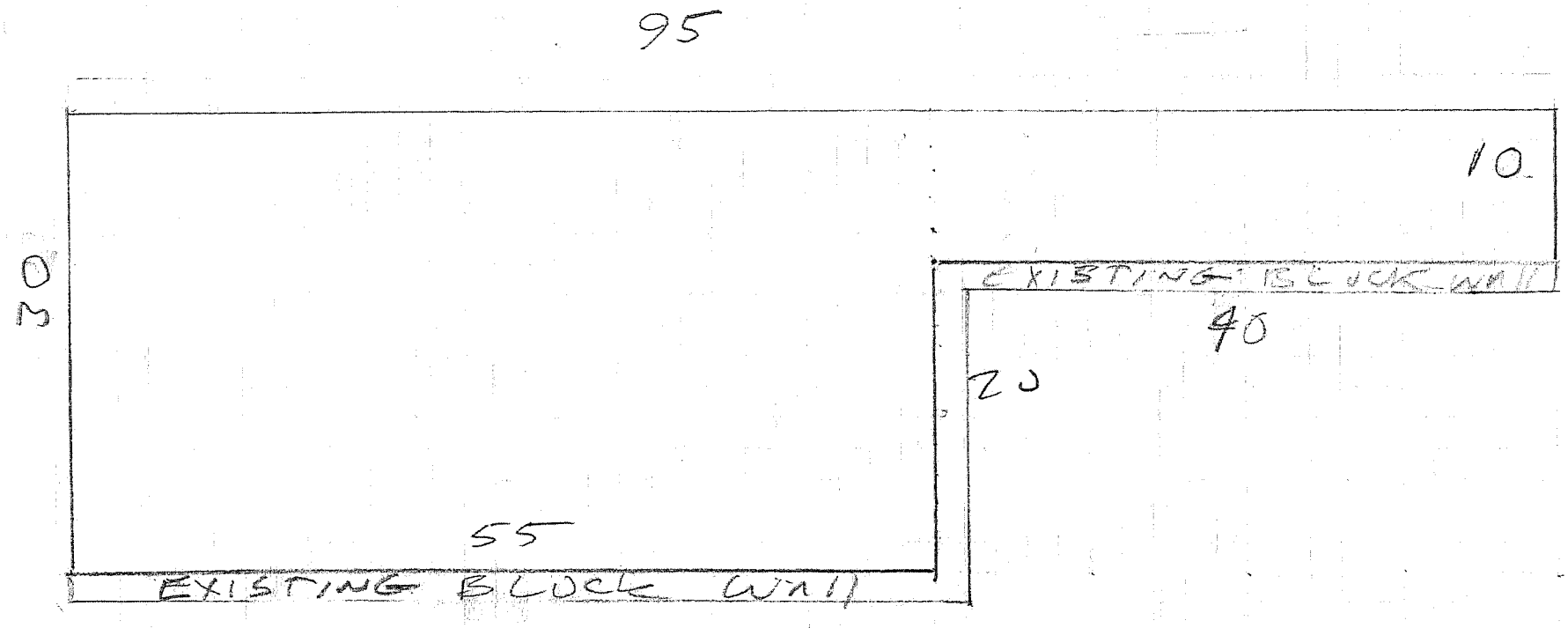

Plans: Concrete Flatwork P.3

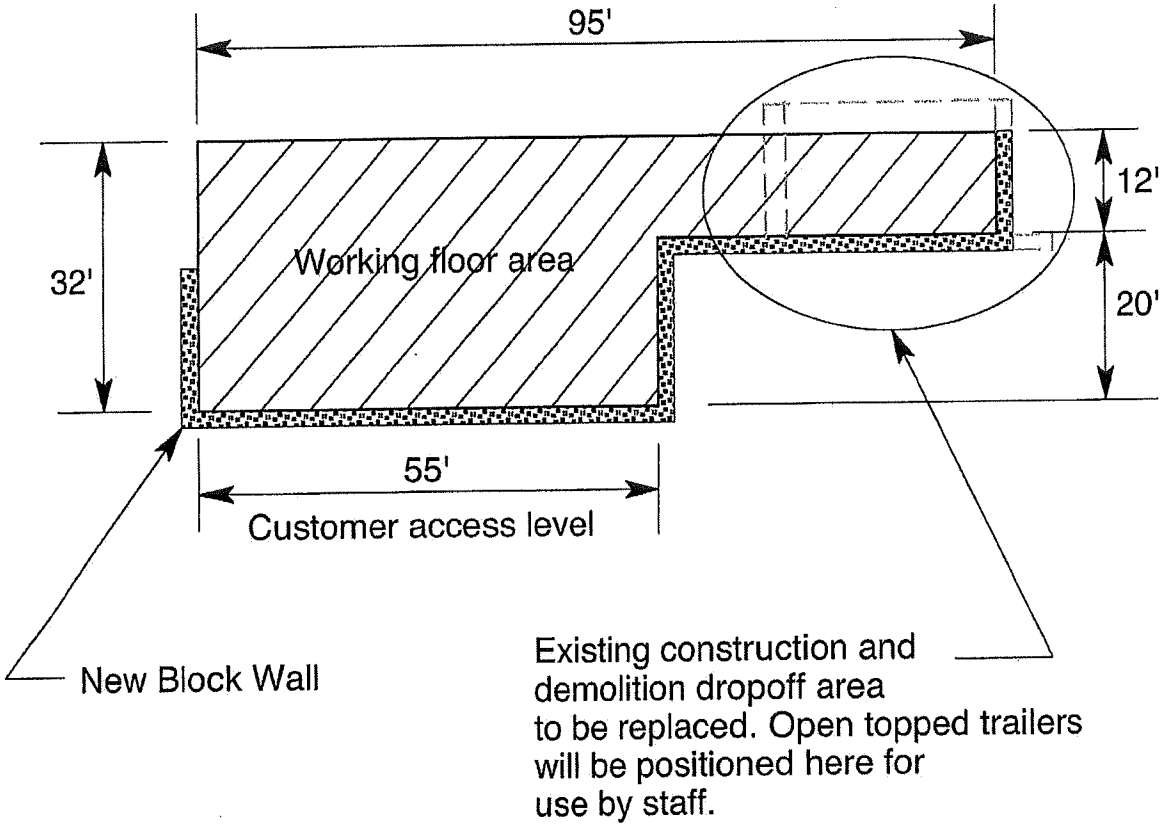

Scale: 1" = 20'

Figure 2 - New CD Dropoff Area
Permit Application
BWP-SW-21
New CD Area

ATP Environmental *April 29, 2010*

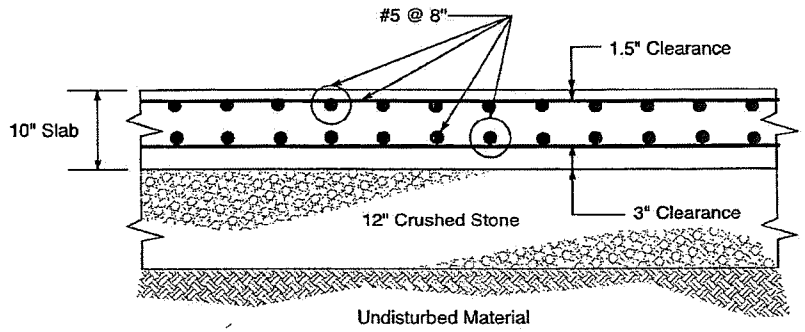

Reinforced Concrete Pad Section

Not to Scale

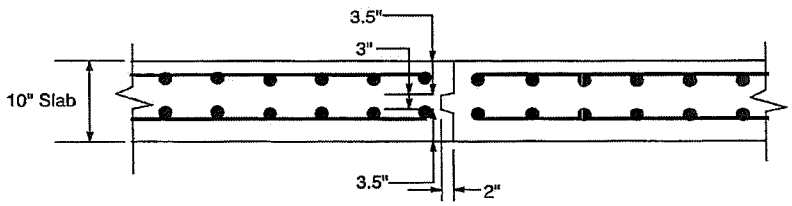

Typical Construction Joint

Not to Scale

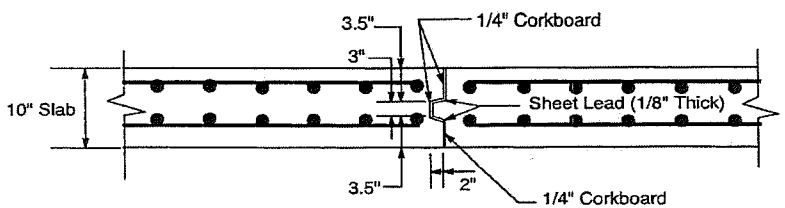

Expansion Joint

Not to Scale

Reinforced Concrete Construction Notes

1.Undisturbed material below concrete slab shall be compacted to a minimum of 95% modified proctor optimum density in conformance with ASTM D 1556.

2. No concrete shall be placed in water or on frozen bearing stratum.

3. Prior to placing any layer the area shall be inspected and approved by the project engineer for adequacy of bearing, slope, and compaction.

4. Field compaction tests shall conform to ASTM D – 1556.

5. Provide continuous drainage by mechanical methods to control surface and ground water as required during construction.

6. Pad concrete shall comply with ACI 301 specifications for structural concrete for buildings and ACI recommended practices for concrete formwork, transporting and placing concrete and cold weather concreting for details not otherwise specified.

7. Submit proposed concrete mix designs for review and obtain engineer's approval prior to placing concrete.

8. All concrete shall be quality controlled normal weight concrete meeting a minimum compressive strength in 28 days of 4000 PSI.

9. Do not place concrete until the reinforcing steel has been inspected and approved by the engineer or the testing agency's engineer of the job.

10. Reinforcing bars shall conform to ASTM A615, grade 60, UON. All reinforcing shall be epoxy coated rebars conforming to the requirements of the Fusion Bonded Coaters Association.

11. The development strength at laps shall be in accordance with ACI 318.

12. All concrete work shall conform to the requirements of the American Concrete Institute, ACI 318.

13. All reinforcing steel shall be held rigidly and accurately in place. Bars shall be securely wired together and protected against displacement before and during placement of concrete.

14. Keys at joints in concrete slap shall taper from 2-3/4" to 3" (TYP).

15. Concrete slump shall not exceed 4".

16. Contractor to verify all dimensions in the field.

17. Concrete pad shall be constructed with construction joints placed at 25' spacing on center and with expansion joints placed at 50' spacing on center

18. Reinforcing shall be continuous through construction joints and end 2' clear of expansion joints.

Figure 4
BWP-SW-21 / X232995

A T P ENVIRONMENTAL

April 29, 2010

Plans: Concrete Flatwork P. 4

PLANS: CONCRETE FLATWORK P.5

Notes

1. Alternate courses and interlock blocks at corners.

2. Carefully cut geo-textile to allow fabric to fit over the interlocking blocks and extend to the front face of the wall.

3. Adjust gravel layer thickness to maintain single block reveal above grade while maintaining a minimum of one block below grade.

4. Provide flush finish along top of wall by not providing modular block keys along the top course of blocks.

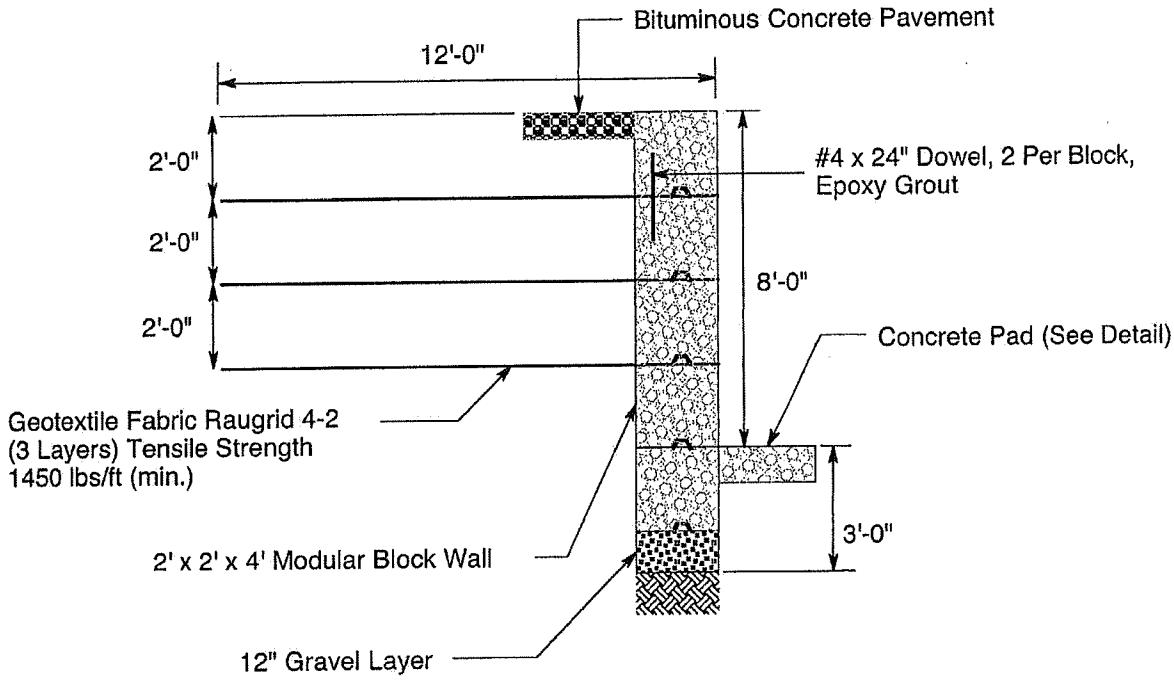

Modular Wall Detail

Notes on Construction of Modular Block Walls

1. Lay geotextile fabric on block wall using Sonneborn Premium Adhesive continuously 1" wide along fabric end and inside edge of blocks. Bond strength = 1000 PSI.

2. Compact soil in 12" layers. Verify minimum bearing capacity of in-situ soil at toe of blocks is 4000 PSF.

Figure 5
BWP-SW-21 / X232995
A T P ENVIRONMENTAL
April 29, 2010

PLANS: CONCRETE FLATWORK P.6

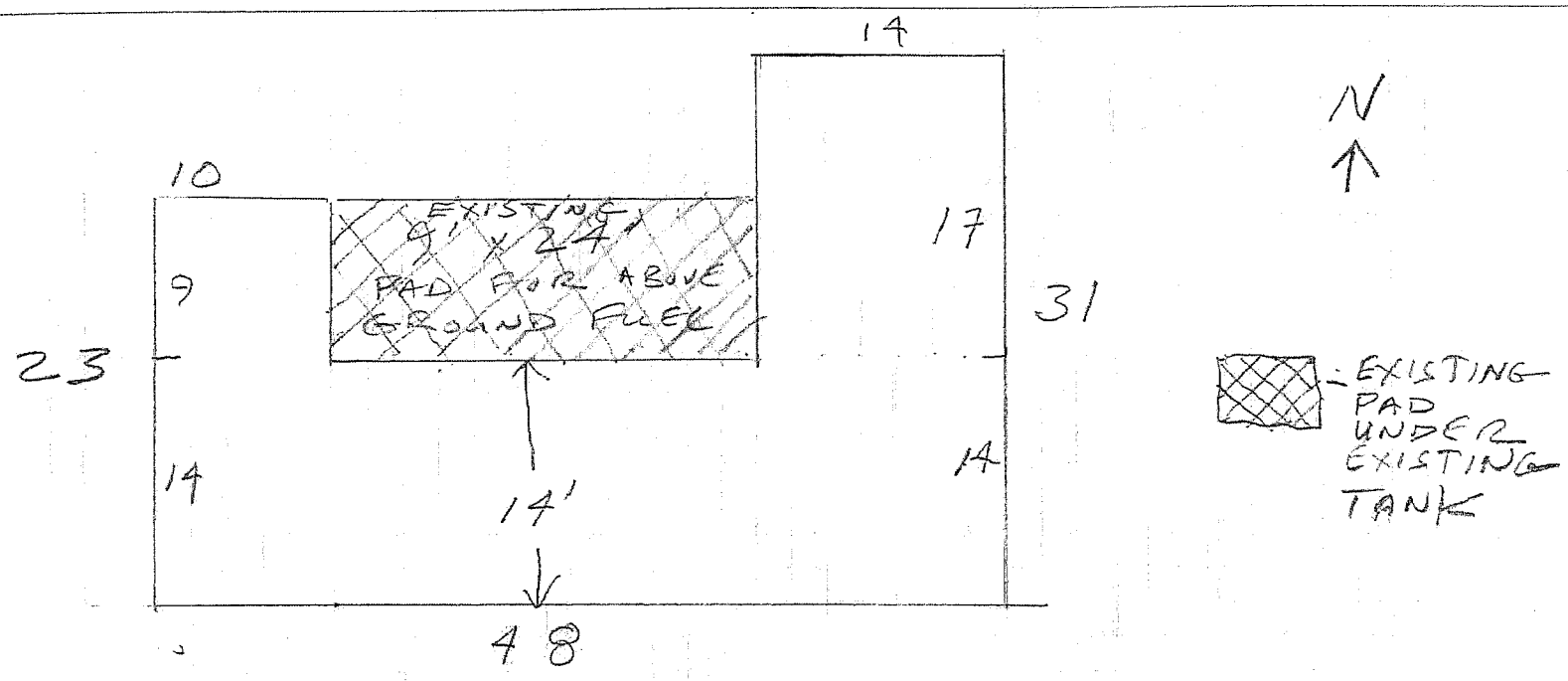

FUEL PAD

8" THICK PCC 4,000 lb 3/4" 611 lb mix
MAX FLYASH 12%

SINGLE MAT #5 RB 12" ON CENTER

SPILL GROVES PER MASS REG

Plans: CONCRETE FLATWORK P.7

POSITIVE LIMITING BARRIER

SELF SERVICE FIRE PROTECTION SYSTEM

PARTIAL SECTIONS OF CONCRETE MATS SHOWING

SQUARE GROOVES OR "V" GROOVES

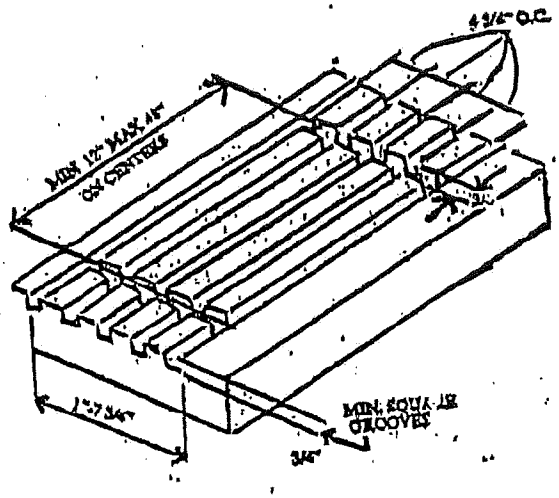

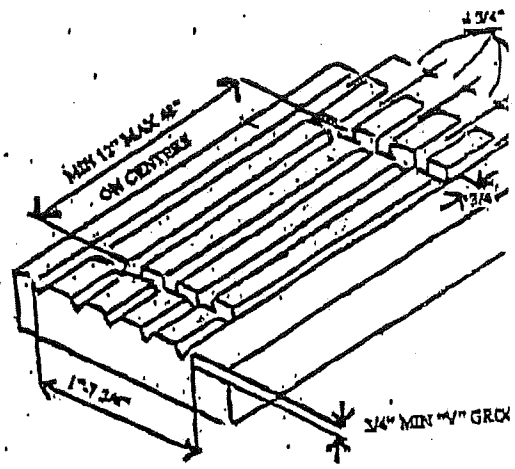

NOTE: The positive limiting barrier to be 5 continuous square or "V" grooves 3/4"x3/4" deep, on 4 3/4 centers with cross interconnecting grooves, either square or "V", equally spaced on min. 12" max. 48" centers. The outside groove to be at limits of hazard protection area and the potential spill area to be within this protection area.