CONTRACT 1
DISTRICT G WATER STORAGE TANK

EASTHAM, MASSACHUSETTS

DECEMBER 2014

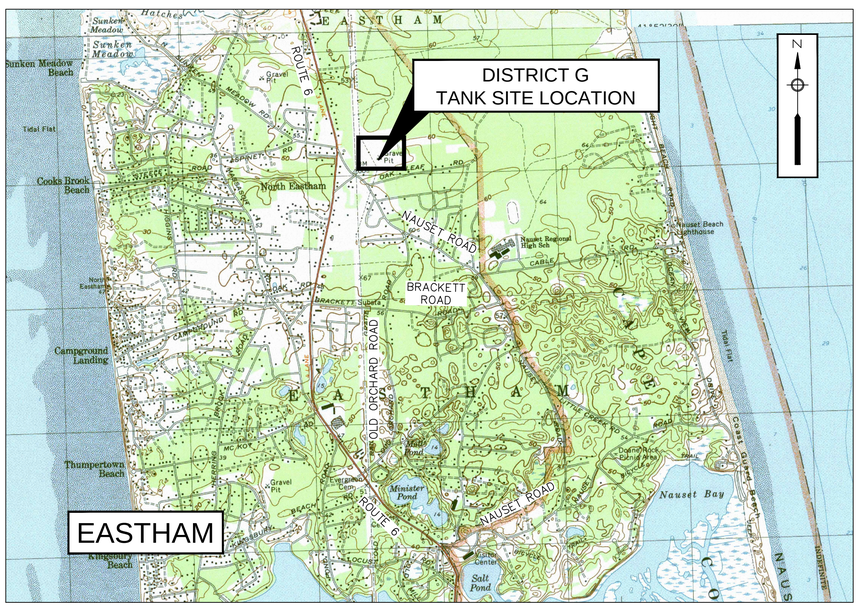

VICINITY MAP
1"= 2,000'

LIST OF DRAWINGS

G - 1	GENERAL NOTES AND LEGEND
C - 1	EXISTING CONDITIONS PLAN
C - 2	PROPOSED WATER STORAGE TANK SITE PLAN
CD - 1	CONSTRUCTION DETAILS I
CD - 2	CONSTRUCTION DETAILS II
CD - 3	CONSTRUCTION DETAILS III
M - 1	MECHANICAL DRAWINGS
M - 2	MECHANICAL DETAILS
E-1	ELECTRICAL SHEET I
E-2	ELECTRICAL SHEET II
I - 1	INSTRUMENTATION AND SCADA

TOWN ADMINISTRATOR

SHEILA VANDERHOEF

BOARD OF SELECTMEN

LINDA BURT
JOHN KNIGHT
MARTIN McDONALD
WALLACE ADAMS, II
ELIZABETH GAWRON

PUBLIC WORKS SUPERINTENDENT

NEIL ANDRES, P.E.

PROGRESS PRINT
DECEMBER 2014
NOT FOR CONSTRUCTION

Environmental Partners GROUP
A partnership for engineering solutions.

PLAN

SCALE: 1"=20'

Drawing file: I:\Eastham 217\Phase 1 - Eastham Water System\217-1401.01 Contract 1 District G Tank Site\01 Drawings\03 CONTRACT 1 - C1-4-RJP_recover_recover.dwg Plot Date: Dec 09,2014-2:31pm

Environmental Partners GROUP
A partnership for engineering solutions.

FOR REVIEW ONLY

MARK	DATE	DESCRIPTION

Scale	1"=20'
Date	DECEMBER 2014
Job No.	217-1401.01
Designed by	RJP
Drawn by	RJP
Checked by	RJT
Approved by	PCM

THIS LINE IS ONE INCH LONG WHEN PLOTTED AT FULL SCALE ON A 22" X 34" DRAWING

CONTRACT 1
DISTRICT G WATER STORAGE TANK
EASTHAM, MASSACHUSETTS

EXISTING SITE PLAN

FOR REVIEW

Sheet No.
C-1

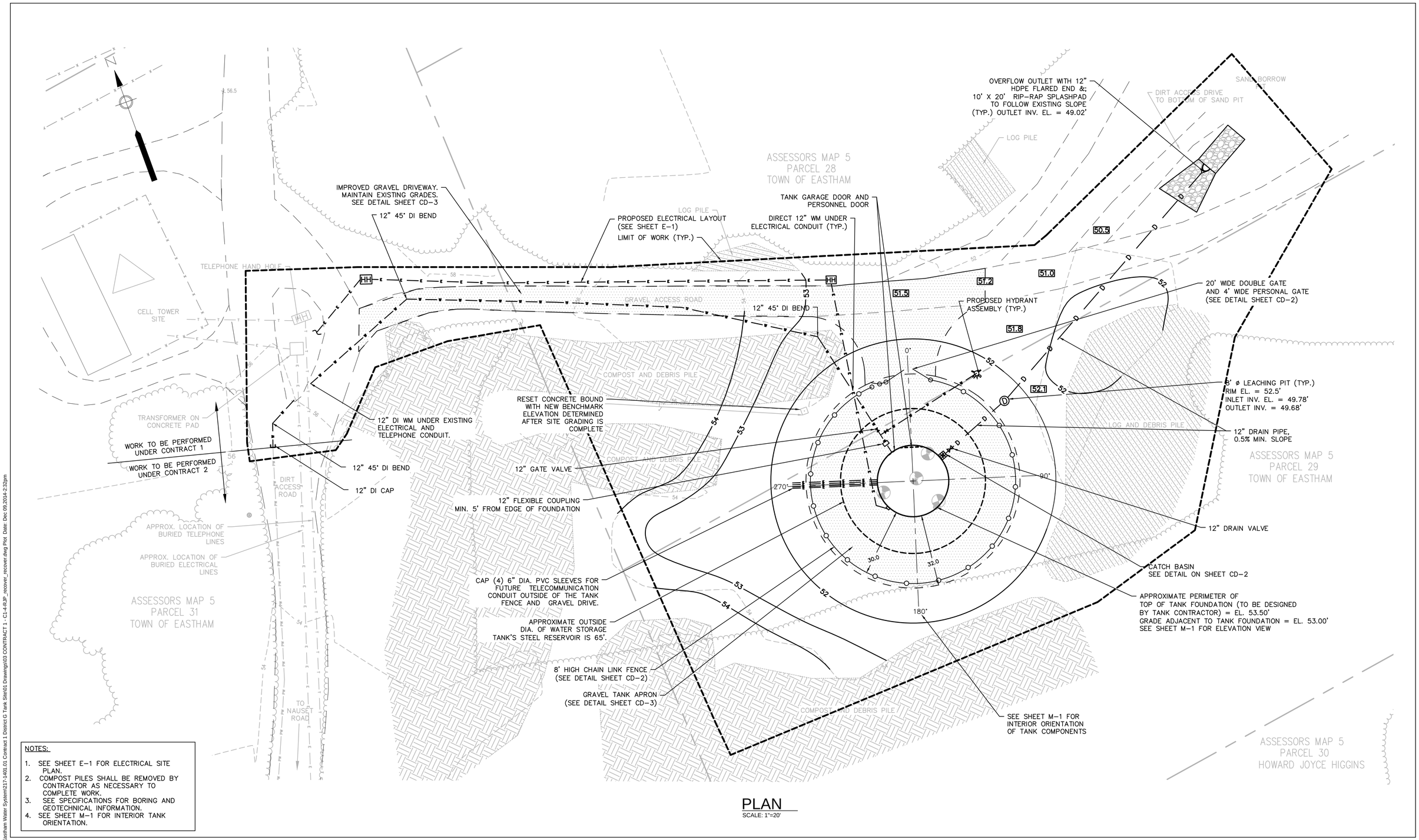

NOTES:

1. SEE SHEET E-1 FOR ELECTRICAL SITE PLAN.
2. COMPOST PILES SHALL BE REMOVED BY CONTRACTOR AS NECESSARY TO COMPLETE WORK.
3. SEE SPECIFICATIONS FOR BORING AND GEOTECHNICAL INFORMATION.
4. SEE SHEET M-1 FOR INTERIOR TANK ORIENTATION.

PLAN

SCALE: 1"=20'

TOWN OF EASTHAM INCORPORATED 1651

Environmental Partners GROUP

A partnership for engineering solutions.

FOR REVIEW ONLY

MARK	DATE	DESCRIPTION

Scale	1"=20'
Date	DECEMBER 2014
Job No.	217-1401.01
Designed by	RJP
Drawn by	RJP
Checked by	RJT
Approved by	PCM

THIS LINE IS ONE INCH LONG WHEN PLOTTED AT FULL SCALE ON A 22" X 34" DRAWING

CONTRACT 1
DISTRICT G WATER STORAGE TANK
EASTHAM, MASSACHUSETTS

PROPOSED WATER STORAGE TANK SITE PLAN

FOR REVIEW

Sheet No.

C-2

Drawing file: I:\Eastham.217\Phase 1 - Eastham Water System\217-1401.01 Contract 1 District G Tank Site\01 Drawings\03 CONTRACT 1 - C1-4-RJP_recover_recover.dwg Plot Date: Dec 09,2014-2:32pm

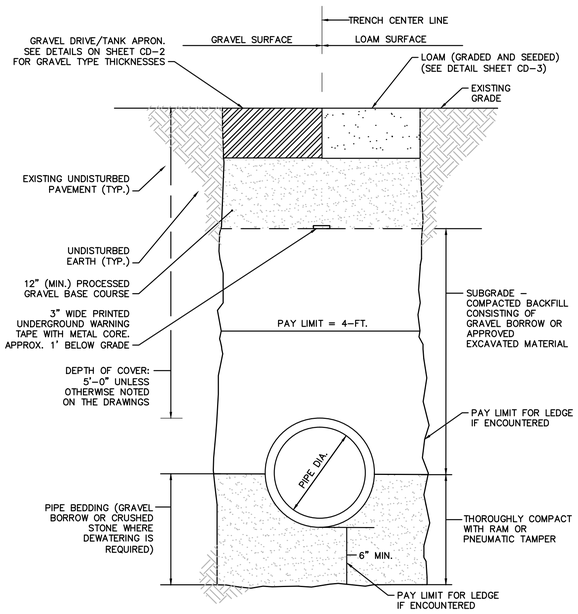

WATER MAIN TRENCH DETAIL

SCALE: N.T.S.

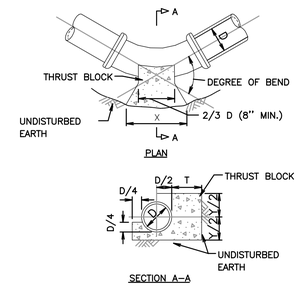

NOTES:

1. ALL CONCRETE SHALL BE 3000 P.S.I. @ 28 DAYS (CLASS "A" CONCRETE)
2. DIMENSIONS SHOWN ARE MINIMUM AND ARE BASED UPON SOIL PRESSURE OF 1500 P.S.F. AND TOTAL PRESSURE OF 250 P.S.I. TOTAL PRESSURE IS WORKING PRESSURE PLUS SURGE PRESSURE.
3. THRUST BLOCKS SHALL BEAR AGAINST UNDISTURBED EARTH.

TABLE OF DIMENSIONS

DIMENSION	90° BEND							45° BEND							22 1/2° BEND							11 1/4° BEND						
D (in.)	4	6	8	10	12	14	16	4	6	8	10	12	14	16	4	6	8	10	12	14	16	4	6	8	10	12	14	16
X (in.)	35	35	50	56	72	80	142	24	24	35	45	51	60	107	28	28	30	32	37	42	74	12	12	19	21	27	33	59
Y (in.)	20	20	24	32	35	40	71	16	16	19	21	27	33	59	13	13	13	16	19	22	39	8	8	9	12	13	16	28
T (in.)	11	11	14	16	19	22	39	11	11	14	16	19	22	39	11	11	13	16	19	22	39	11	11	13	16	19	22	39

CONCRETE THRUST BLOCK DETAIL AT BEND

SCALE: N.T.S.

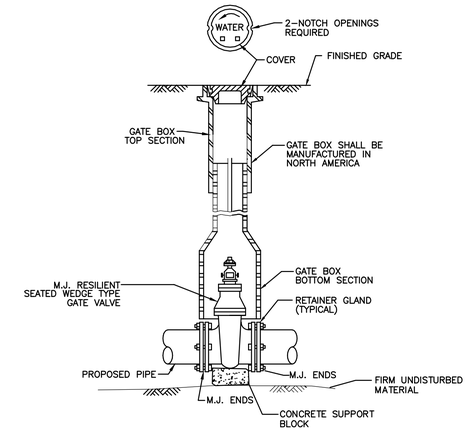

GATE VALVE AND VALVE BOX DETAIL

SCALE: N.T.S.

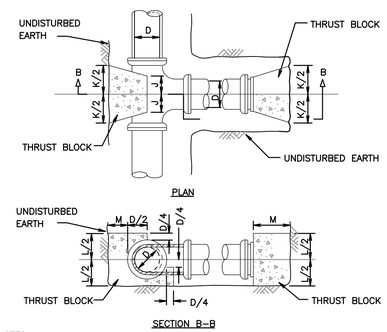

NOTES :

1. ALL CONCRETE SHALL BE 3000 PSI @ 28 DAYS (CLASS 'A' CONCRETE).
2. DIMENSIONS SHOWN ARE MINIMUM AND ARE BASED UPON SOIL PRESSURE OF 1500 PSF AND TOTAL PRESSURE OF 250 PSI. TOTAL PRESSURE IS WORKING PRESSURE PLUS SURGE PRESSURE.
3. THRUST BLOCKS SHALL BEAR AGAINST UNDISTURBED EARTH.

TABLE OF DIMENSIONS

D (in)	4	6	8	10	12	14	16
J (in)	6	6	7	9	10	12	22
K (in)	16	16	20	26	32	36	64
L (in)	16	16	21	24	29	34	61
M (in)	11	11	14	16	19	22	39

CONCRETE THRUST BLOCK DETAIL AT TEE / PLUG

SCALE: N.T.S.

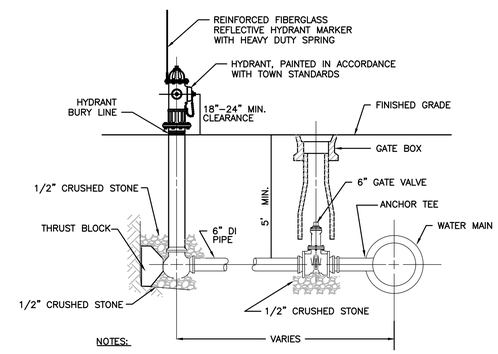

NOTES:

1. ALL HYDRANT, VALVE AND TEE JOINTS TO BE RESTRAINED MECHANICAL JOINTS.
2. DEPTH OF HYDRANT BURY SHALL SUIT INSTALLED DEPTH OF COVER OVER WATER MAIN. INSTALL RISERS AS NECESSARY AT NO ADDITIONAL COST TO THE OWNER.

FIRE HYDRANT ASSEMBLY DETAIL

SCALE: N.T.S.

TOWN OF EASTHAM INCORPORATED 1651

Environmental Partners GROUP

A partnership for engineering solutions.

FOR REVIEW ONLY

MARK	DATE	DESCRIPTION

Scale	AS NOTED
Date	DECEMBER 2014
Job No.	217-1401.01
Designed by	RJP
Drawn by	RJP
Checked by	RJT
Approved by	PCM

THIS LINE IS ONE INCH LONG WHEN PLOTTED AT FULL SCALE ON A 22" X 34" DRAWING

CONTRACT 1
DISTRICT G WATER STORAGE TANK
EASTHAM, MASSACHUSETTS

CONSTRUCTION DETAILS I

FOR REVIEW

Sheet No.

CD-1

Drawing file: I:\Eastham 217\Phase 1 - Eastham Water System\217-1401.01 Contract 1 District G Tank Site\01 Drawings\03 CONTRACT 1 - C1-4-RJP_recover_recover.dwg Plot Date: Dec 09,2014-2:2pm

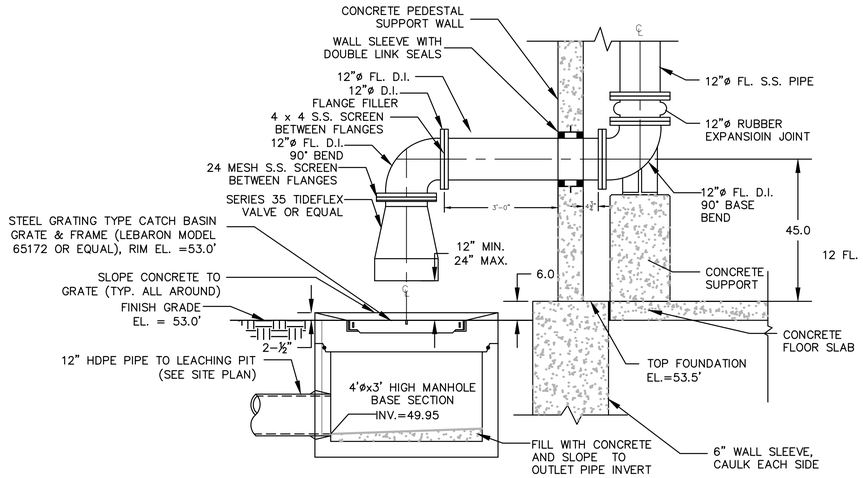

OVERFLOW DETAIL

SCALE: 1/2" = 1'-0"

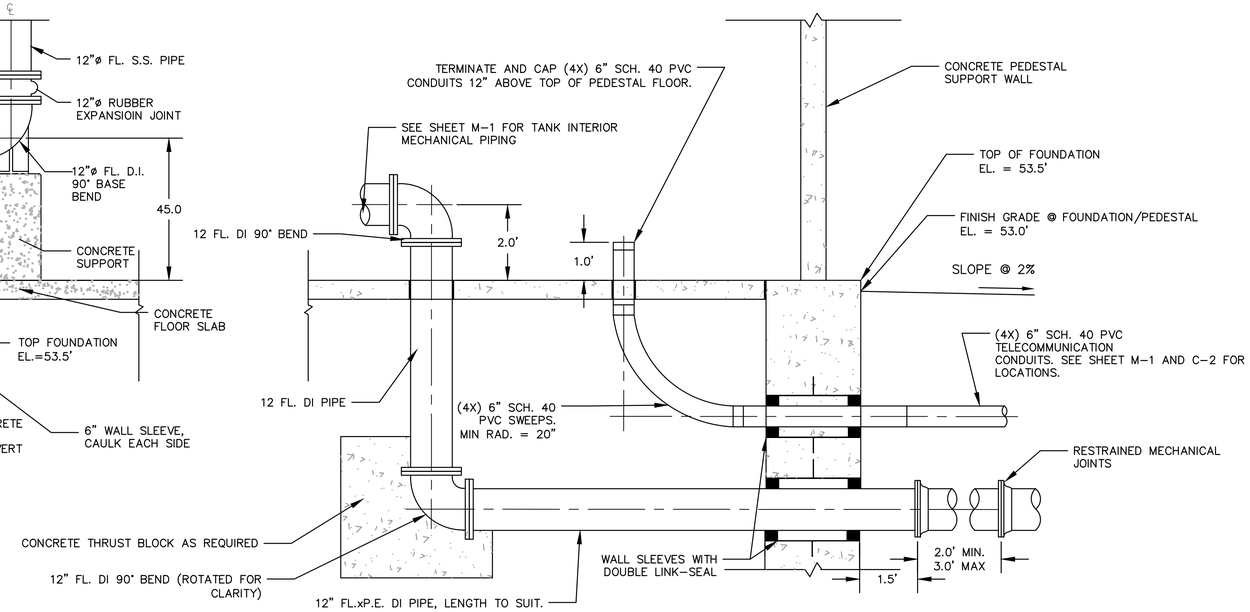

TANK FOUNDATION PIPE PENETRATION DETAIL

SCALE: 1/2" = 1'-0"

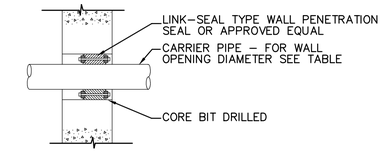

THRU EXISTING CONCRETE WALL

CARRIER PIPE NOMINAL SIZE	CARRIER PIPE O.D.	WALL SLEEVE SIZE	CORE DRILLED I.D.
2"	2.50"	4"	4"
4"	4.80"	8"	8"
8"	9.05"	12"	12"
16"	17.40"	20"	20"
18"	19.50"	24"	24"
24"	25.80"	30"	29"

NOTES:

1. FOR OTHER PIPE SIZES CONSULT MANUFACTURER'S SPECIFICATIONS.
2. SOME APPLICATIONS MAY REQUIRE STANDARD WALL CASTINGS.

* PROVIDE DOUBLE LINK SEAL ON EXTERIOR WALLS.

WALL PENETRATION DETAIL

SCALE: N.T.S.

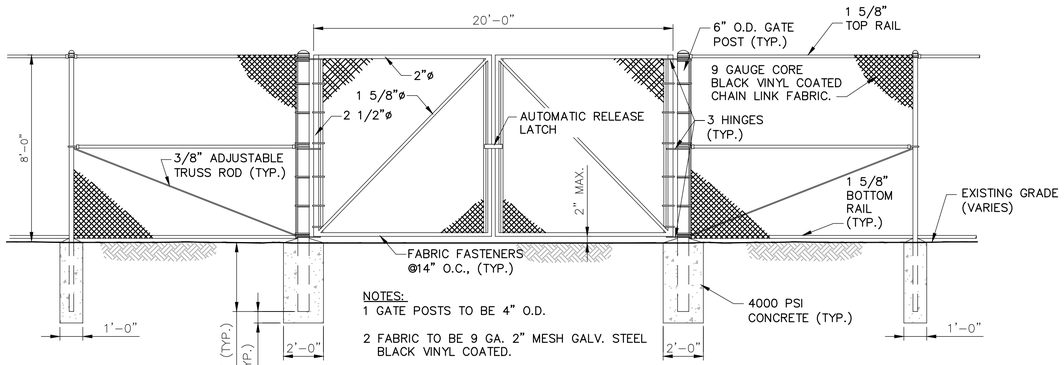

NOTES:

1 GATE POSTS TO BE 4" O.D.

2 FABRIC TO BE 9 GA. 2" MESH GALV. STEEL BLACK VINYL COATED.

GENERAL CHAIN LINK FENCE NOTES:

1. ALL CHAINLINK FENCE FABRIC TO BE KNUCKLED (TOP AND BOTTOM).
2. ALL CHAIN LINK FENCE POSTS, FABRIC, TIES AND MATERIALS SHALL BE BLACK VINYL COATED.
3. ALL SECTIONS INCLUDE BOTTOM RAIL.

20' WIDE DOUBLE GATE DETAIL

SCALE: N.T.S.

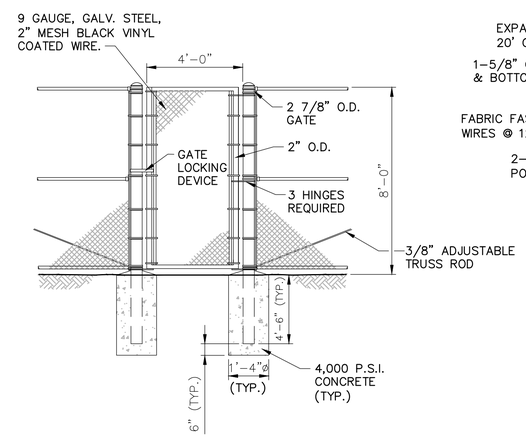

4' WIDE PERSONNEL GATE

SCALE: N.T.S.

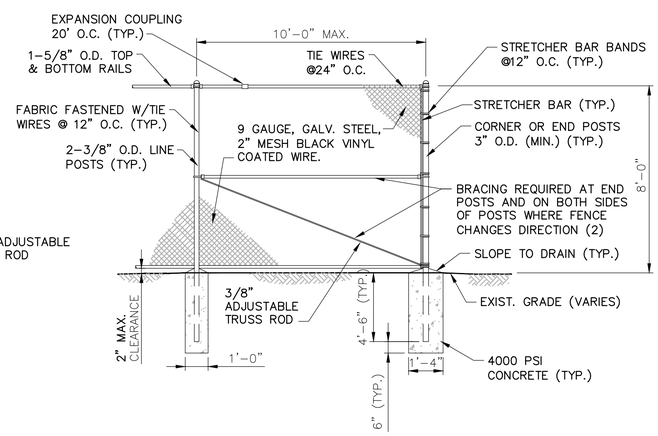

8' HIGH FENCE DETAIL

SCALE: N.T.S.

Drawing file: I:\Eastham.217\Phase 1 - Eastham Water System\217-1401.01 Contract 1 District G Tank Site\01 Drawings\03 CONTRACT 1 - C1-4-RJP_recover_recover.dwg Plot Date: Dec 09,2014-2:32pm

TOWN OF EASTHAM INCORPORATED 1651

Environmental Partners GROUP

A partnership for engineering solutions.

FOR REVIEW ONLY

MARK	DATE	DESCRIPTION

Scale	AS NOTED
Date	DECEMBER 2014
Job No.	217-1401.01
Designed by	RJP
Drawn by	RJP
Checked by	RJT
Approved by	PCM

THIS LINE IS ONE INCH LONG WHEN PLOTTED AT FULL SCALE ON A 22" X 34" DRAWING

CONTRACT 1
DISTRICT G WATER STORAGE TANK
EASTHAM, MASSACHUSETTS

CONSTRUCTION DETAILS - II

FOR REVIEW

Sheet No.

CD-2

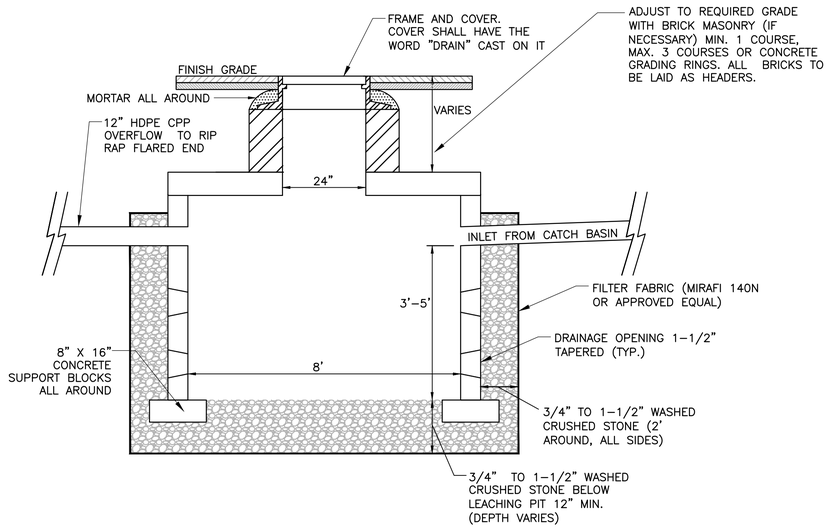

8' DIAMETER LEACHING PIT DETAIL

SCALE: N.T.S.

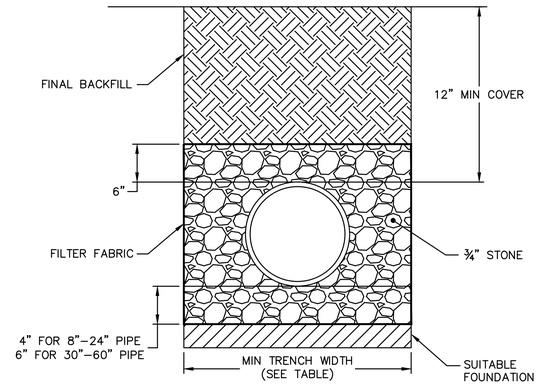

RECOMMENDED MIN TRENCH WIDTHS

PIPE DIA	MIN. TRENCH WIDTH
8"	26"
12"	30"
15"	34"

NOTES:

1. ALL PIPE SYSTEMS SHALL BE INSTALLED IN ACCORDANCE WITH ASTM D2321.
2. FOUNDATION: WHERE THE TRENCH BOTTOM IS UNSTABLE, THE CONTRACTOR SHALL EXCAVATE TO A DEPTH REQUIRED BY THE ENGINEER AND REPLACE WITH SUITABLE MATERIAL AS SPECIFIED BY ENGINEER.

DRAIN PIPE TRENCH DETAIL

SCALE: N.T.S.

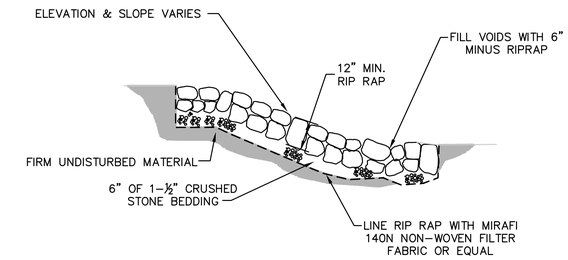

NOTE: RIPRAP SHALL CONFORM TO MASS DOT STANDARD SPECIFICATION M2.02.3.

RIP RAP DETAIL

SCALE: N.T.S.

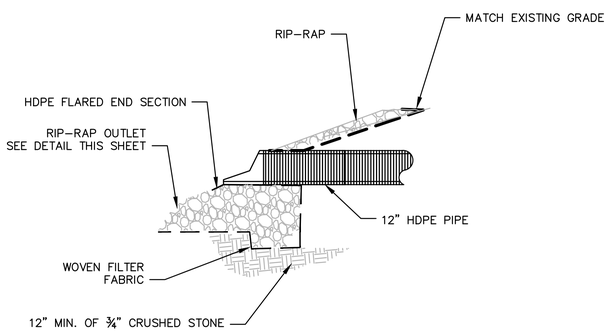

NOTE: RIPRAP SHALL CONFORM TO MASS DOT STANDARD SPECIFICATION M2.02.3.

FLARED END OUTLET DETAIL

SCALE: N.T.S.

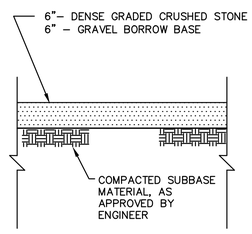

NOTE:

1. REMOVE UP TO 2' OF LOAM AND REPLACE WITH STRUCTURAL BACKFILL MATERIAL.

IMPROVED GRAVEL DRIVEWAY DETAIL

SCALE: N.T.S.

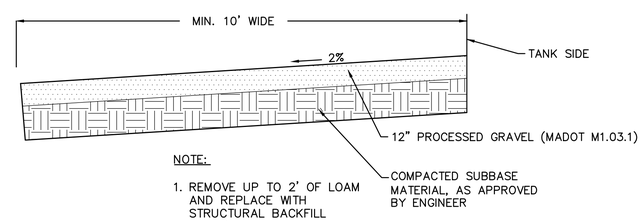

NOTE:

1. REMOVE UP TO 2' OF LOAM AND REPLACE WITH STRUCTURAL BACKFILL MATERIAL.
2. APRON SHALL SLOPE AWAY FROM TANK FOUNDATION.

TANK APRON/DRIVEWAY DETAIL

SCALE: N.T.S.

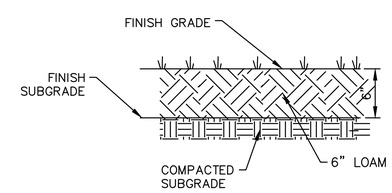

LOAM AND SEED DETAIL

SCALE: N.T.S.

Drawing file: I:\Eastham 217\Phase 1 - Eastham Water System\217-1401.01 Contract 1 District G Tank Site\01 Drawings\03 CONTRACT 1 - C1-4-RJP_recover_recover.dwg Plot Date: Dec 09,2014-2:32pm

TOWN OF EASTHAM INCORPORATED 1651

Environmental Partners GROUP

A partnership for engineering solutions.

FOR REVIEW ONLY

MARK	DATE	DESCRIPTION

Scale	AS NOTED
Date	DECEMBER 2014
Job No.	217-1401.01
Designed by	RJP
Drawn by	RJP
Checked by	RJT
Approved by	PCM

THIS LINE IS ONE INCH LONG WHEN PLOTTED AT FULL SCALE ON A 22" X 34" DRAWING

CONTRACT 1
DISTRICT G WATER STORAGE TANK
EASTHAM, MASSACHUSETTS

CONSTRUCTION DETAILS - III

FOR REVIEW

Sheet No.

CD-3

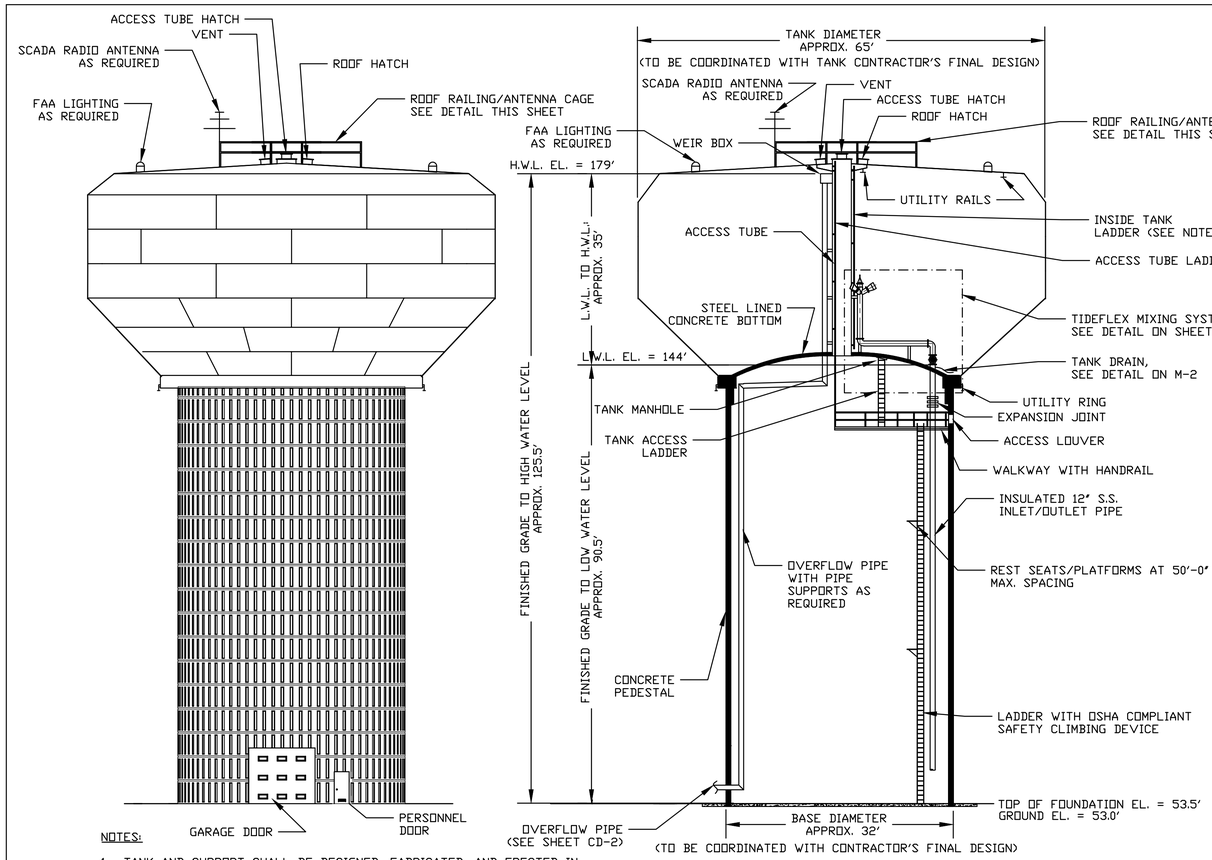

NOTES:

1. TANK AND SUPPORT SHALL BE DESIGNED, FABRICATED, AND ERECTED IN ACCORDANCE WITH AWWA D107 AND THE PROJECT SPECIFICATIONS.
2. ACCESSORIES SHOWN ON ELEVATION DRAWINGS ARE ROTATED FOR CLARITY.
3. TANK ELEVATION DETAIL IS FOR SCHEMATIC PURPOSES ONLY AND NOT TO SCALE.
4. ALL HANDRAILS, PLATFORM LANDINGS, WALKWAYS, LADDERS AND SAFETY CLIMB DEVICES SHALL CONFORM WITH CURRENT OSHA STANDARDS.
5. SEE PROJECT SPECIFICATIONS FOR SHOP AND FIELD PAINT REQUIREMENTS FOR THE STEEL TANK.
6. STERILIZE TANK IN ACCORDANCE WITH AWWA C652-02 AND PROJECT SPECIFICATIONS.
7. FINAL DIMENSIONS WILL BE RESPONSIBILITY OF THE TANK CONTRACTOR.

TANK PROFILE VIEW

SCALE: N.T.S.

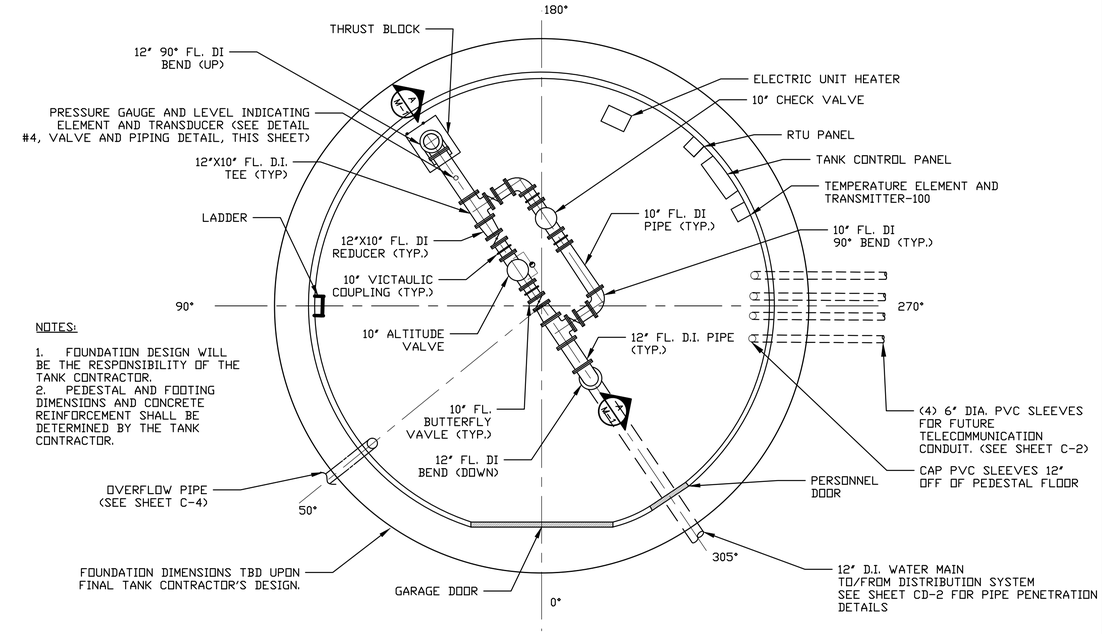

NOTES:

1. FOUNDATION DESIGN WILL BE THE RESPONSIBILITY OF THE TANK CONTRACTOR.
2. PEDESTAL AND FOOTING DIMENSIONS AND CONCRETE REINFORCEMENT SHALL BE DETERMINED BY THE TANK CONTRACTOR.

TANK FLOOR PLAN

SCALE: 3/16"=1'-0"

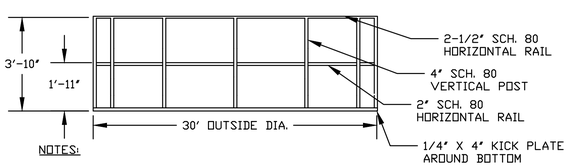

NOTES:

1. ALL RAILING/CAGE COMPONENTS SHALL BE HOT-DIPPED GALVANIZED STEEL.
2. VERTICAL POSTS ARE SPACED AT 30 DEGREE INTERVALS AROUND CIRCUMFERENCE (12 POSTS).

ROOF RAILING/ANTENNA CAGE DETAIL

SCALE: 1/8"=1'-0"

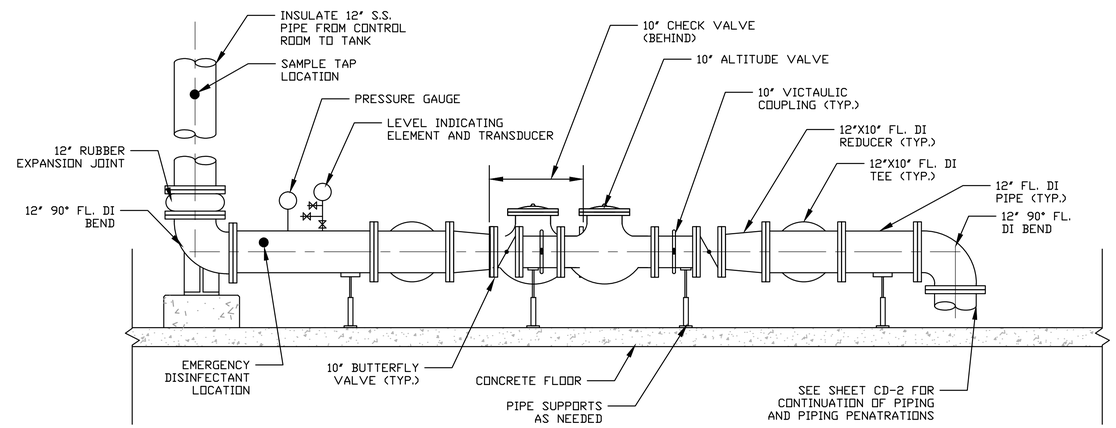

NOTES:

1. ALL FIELD TAPS TO BE COORDINATED WITH ENGINEER AND OWNER.
2. CONTRACTOR TO FIELD CONFIRM ALL PIPE LENGTHS PRIOR TO FABRICATION.
3. ALL PIPING AND TUBING SHALL BE INSULATED TO PREVENT FREEZING. MIN. THICKNESS OF INSULATION IS 2".
4. FURNISH AND INSTALL REMOVABLE INSULATION COVER FOR PRESSURE GAUGE AND SAMPLE TAP TO PREVENT FREEZING. COVER SHALL BE CONSTRUCTED TO BE EASILY REMOVED AND RE-INSULATED WITHOUT DAMAGE.

PIPING CROSS SECTION A-A

SCALE: 1/2"=1'-0"

Drawing file: I:\Eastham 217\Phase 1 - Eastham Water System\217-1401.01 Contract 1 District G Tank Site\01 Drawings\04 CONTRACT 1 - M1-2.dwg Plot Date: Dec 09,2014-2:38pm

TOWN OF EASTHAM INCORPORATED 1651

Environmental Partners GROUP
A partnership for engineering solutions.

FOR REVIEW ONLY

MARK	DATE	DESCRIPTION

Scale	AS NOTED
Date	DECEMBER 2014
Job No.	217-1401.01
Designed by	RJP
Drawn by	RJP
Checked by	RJT
Approved by	PCM

THIS LINE IS ONE INCH LONG WHEN PLOTTED AT FULL SCALE ON A 22" X 34" DRAWING

CONTRACT 1
DISTRICT G WATER STORAGE TANK
EASTHAM, MASSACHUSETTS

MECHANICAL DRAWINGS

FOR REVIEW

Sheet No.
M-1

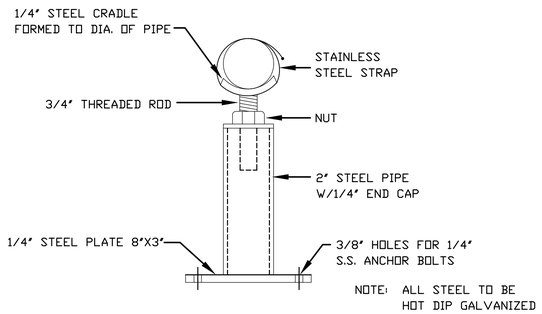

HORIZONTAL PIPE SUPPORT DETAIL

SCALE: N.T.S.

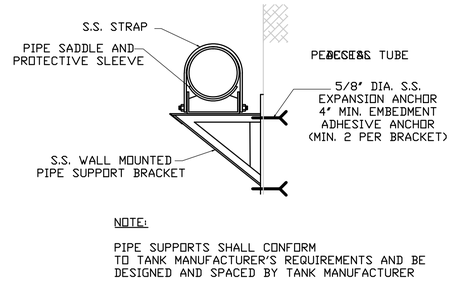

VERTICAL PIPE SUPPORT DETAIL

SCALE: N.T.S.

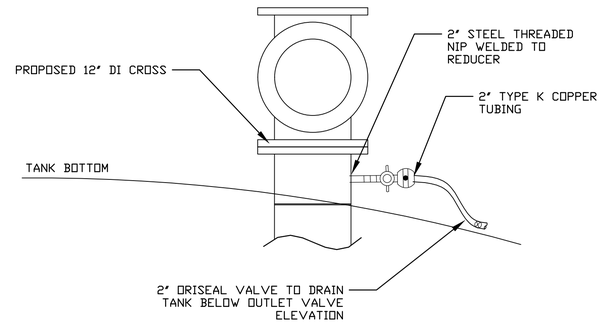

TANK DRAIN DETAIL

SCALE: N.T.S.

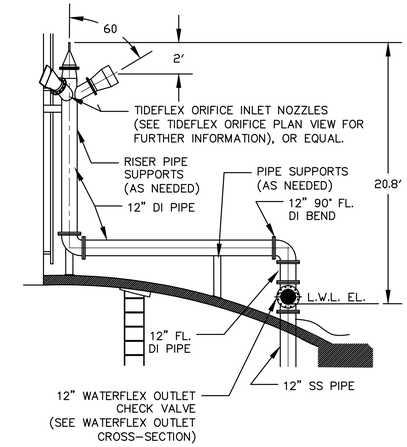

NOTES:

1. QUANTITY, SIZE, ELEVATIONS, LOCATIONS, AND DISCHARGE ANGLES OF INLET NOZZLES, OUTLET CHECK VALVES AND RISER ARE TO BE DETERMINED BY THE MIXING SYSTEM SUPPLIER AND INCLUDED WITHIN THE BID PRICE.
2. CARBON STEEL SECTIONS TO BE SUPPLIED WITH PLAIN ENDS TO BE BUTT WELDED IN THE FIELD.
3. FLANGES SHALL BE ANSI 125/150#.
4. SEE SPECIFICATION SECTION 11268 FOR MIXING SYSTEM DESIGN PARAMETERS.

ELEVATION PROFILE

SCALE: 3/16"=1'-0"

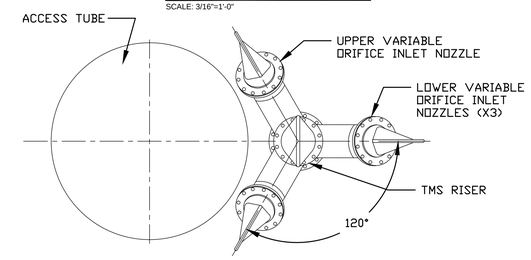

ELEVATION PROFILE

SCALE: N.T.S.

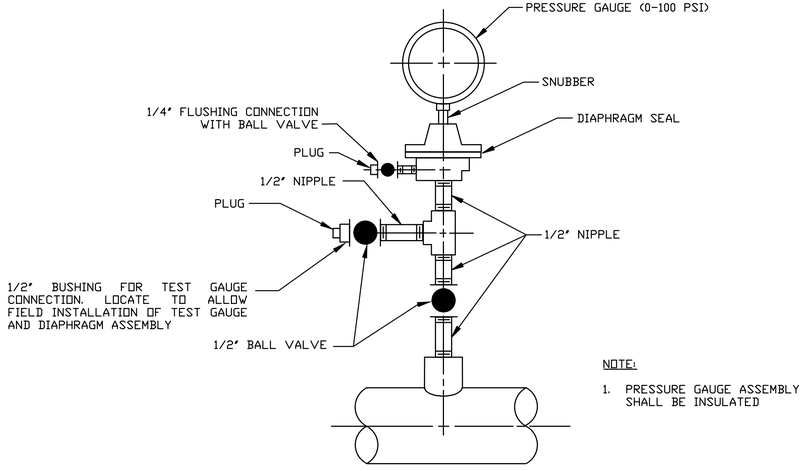

NOTE:

1. PRESSURE GAUGE ASSEMBLY SHALL BE INSULATED

PRESSURE GAUGE MOUNTING DETAIL

SCALE: N.T.S.

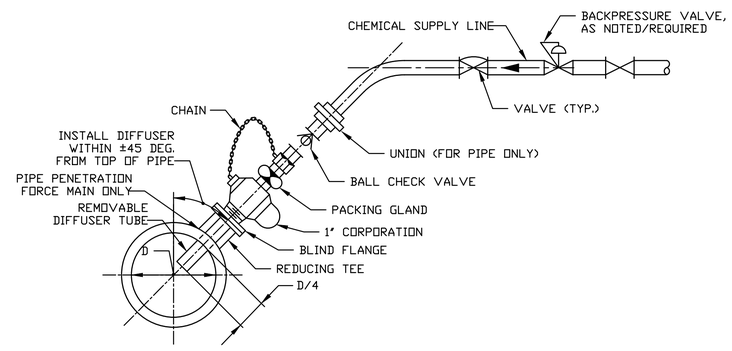

TYPICAL WALL PENETRATION DETAIL

SCALE: N.T.S.

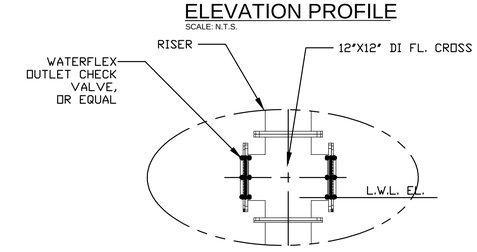

12" X 12" WATERFLEX OUTLET CROSS-SECTION

SCALE: N.T.S.

STATIC MIXING SYSTEM

SCALE: AS NOTED

Environmental Partners GROUP
A partnership for engineering solutions.

FOR REVIEW ONLY

MARK	DATE	DESCRIPTION

Scale	AS NOTED
Date	DECEMBER 2014
Job No.	217-1401.01
Designed by	RJP
Drawn by	RJP
Checked by	RJT
Approved by	PCM

THIS LINE IS ONE INCH LONG WHEN PLOTTED AT FULL SCALE ON A 22" X 34" DRAWING

CONTRACT 1
DISTRICT G WATER STORAGE TANK
EASTHAM, MASSACHUSETTS

MECHANICAL DETAILS

FOR REVIEW

Sheet No.
M-2

Drawing file: I:\Eastham 217\Phase 1 - Eastham Water System\217-1401.01 Contract 1 District G Tank Site\01 Drawings\04 CONTRACT 1 - M1-2.dwg Plot Date: Dec 09,2014-2:38pm

LEGEND

- ROOM LINE
- CONTROL PANEL
- LOCATIONAL DIVIDE / BUILDING LINE
- FIELD/SIGNAL WIRING
- DATA / COMMUNICATION
- ELECTRICAL WIRING
- EXISTING

AI	ANALOG INPUT
AO	ANOLOG OUTPUT
DI	DISCRETE INPUT
DO	DISCRETE OUTPUT
INT.	INTRUSION
IS	INTRUSION SWITCH
LIT	LEVEL INDICATING TRANSMITTER
F/O/R	FORWARD/OFF/REVERSE
HS	HAND SWITCH
PLC	PROGRAMMABLE LOGICAL CONTROLLER
RTU	REMOTE TERMINAL UNIT
TT	TEMPERATURE TRANSMITTER

X X X — FIELD MOUNTED INSTRUMENT TAG

X X X X — PANEL MOUNTED INSTRUMENT TAG (EQUIPMENT MANUFACTURERS PANEL)

X X X X — PANEL MOUNTED INSTRUMENT TAG (INSTRUMENTATION CONTRACTORS PANEL)

X X X — SCADA SYSTEM SIGNAL TAG – A=ANALOG, D=DISCRETE I=INPUT, O=OUTPUT

SCADA ALARM: L = LOW, H = HIGH NF = NO FLOW

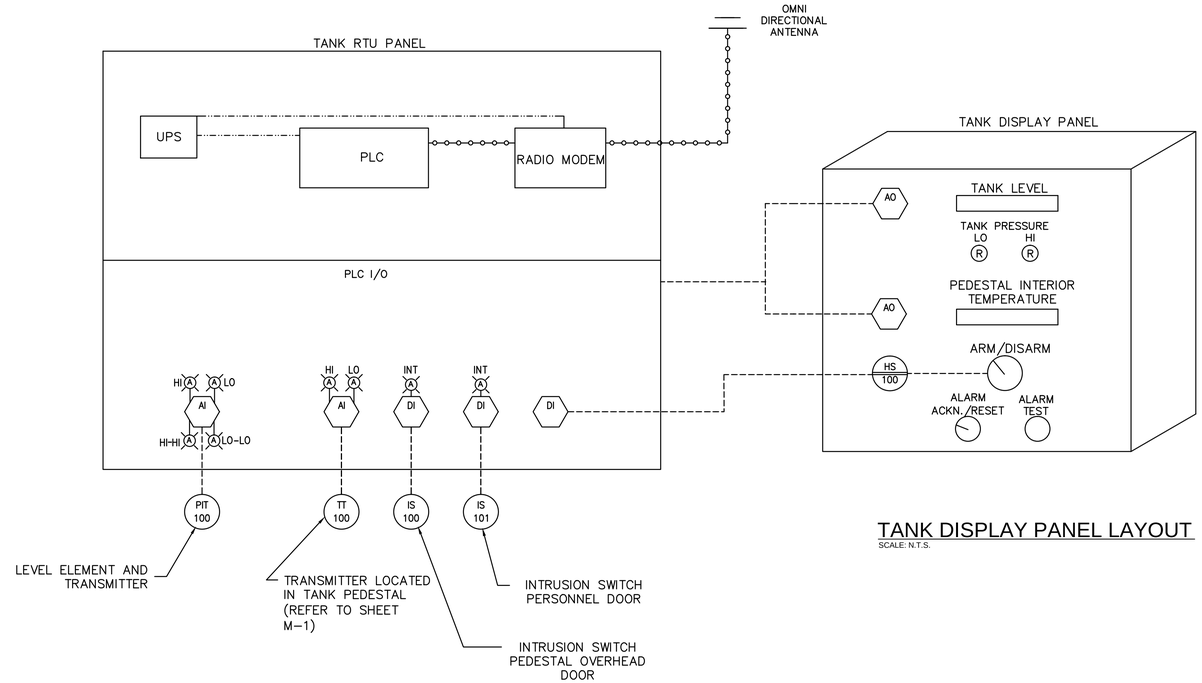

TANK DISPLAY PANEL LAYOUT

SCALE: N.T.S.

SCADA SYSTEM SCHEMATIC

SCALE: N.T.S.

NOTES:

1. THE RTU/PLC SHALL COMMUNICATE VIA RADIO TO THE NEW SCADA SYSTEM NODE TO BE INSTALLED.

Drawing file: I:\Eastham.217\Phase 1 - Eastham Water System\217-1401.01 Contract 1 District G Tank Site\01 Drawings\05 CONTRACT 1 - I-1.dwg Plot Date: Dec 09,2014-2:40pm

TOWN OF EASTHAM — INCORPORATED 1651

Environmental Partners GROUP — A partnership for engineering solutions.

FOR REVIEW ONLY

MARK	DATE	DESCRIPTION

Scale	N.T.S.
Date	DECEMBER 2014
Job No.	217-1401.01
Designed by	RJP
Drawn by	RJP
Checked by	RJT
Approved by	PCM

THIS LINE IS ONE INCH LONG WHEN PLOTTED AT FULL SCALE ON A 22" X 34" DRAWING

CONTRACT 1
DISTRICT G WATER STORAGE TANK
EASTHAM, MASSACHUSETTS

INSTRUMENTATION AND SCADA

FOR REVIEW

Sheet No. I-1