Source: Ecological Engineering Group, Weston, MA
http://www.ecological-engineering.com

Urine Collection in Basement or as Separate Tank Outdoors

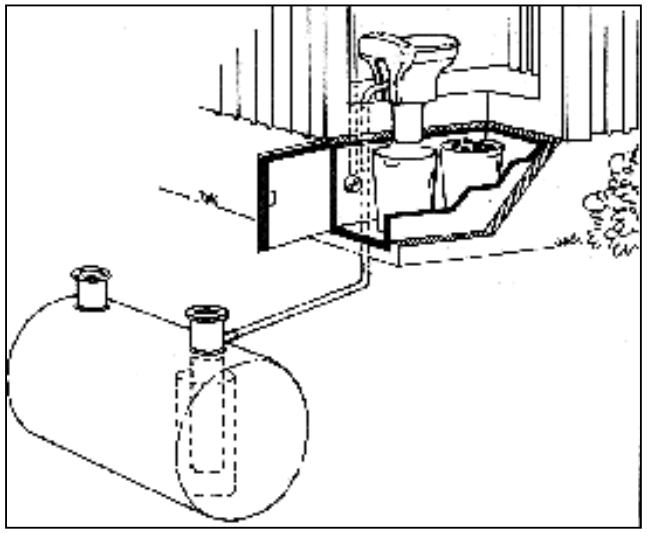

Source: Ecological Engineering Group, Weston, MA
http://www.ecological-engineering.com

1. Idle: Outlet for urine drainage is closed by a movable plug.

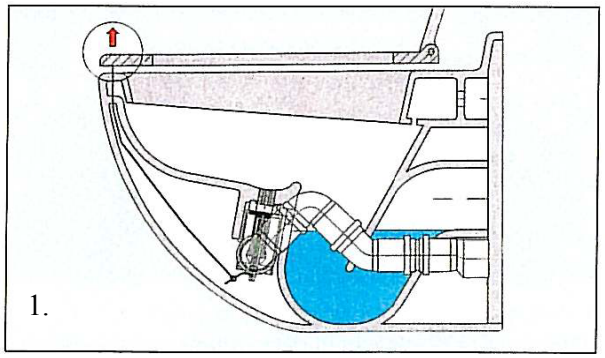

2. In Use: While the toilet is in use (person sitting), the plug is mechanically opened by a lever. Urine flows to the front inlet.

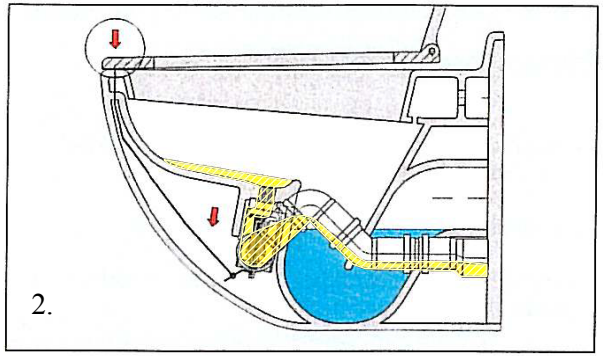

3. Flushing: After the user is getting up, the toilet can be flushed. While the plug for the urine outlet is closed, feces and paper can be flushed out with minimal amounts of water through the rear outlet.

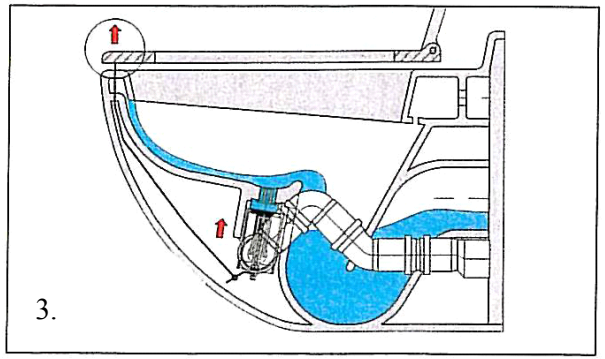

Source: Roediger Vacuum, Hanau Germany
http://www.roevac.com

STEARNS & WHELER LLC
Environmental Engineers & Scientists
HYANNIS, MASSACHUSETTS
1545 Iyannough Road
Phone: 508 362-5680
Fax: 508 362-5684
Web: stearnswheler.com

Date: 12/2008 Project No. 61204

TOWN OF EASTHAM, MASSACHUSETTS

URINE SOURCE SEPARATION

FIGURE 7-9

File Location:G:\Jobs\60000\61204 Eastham\
Figures\Technology Screening Report 8_14_08\
Chapters 7 & 8\61204F8-9_USS.mxd